United States of America

Department of Transportation Federal Aviation Administration

Supplemental Type Certificate

Number SA00682SE

This certificate, issued to **Rosen Sunvisor Systems, LLC**
86365 College View Road
Eugene, OR 97405

certifies that the change in the type design for the following product with the limitations and conditions therefor as specified hereon meets the airworthiness requirements of Part 23 *of the* Federal Aviation *Regulations.*
(See Type Certification Data Sheet A17WE for the complete certification basis.)

Original Product—Type Certificate Number: A17WE
Make: Aerostar
Model: PA-60-600 (Aerostar 600), PA-60-601 (Aerostar 601), PA-60-601P (Aerostar 601P), PA-60-602P (Aerostar 602P), PA-60-700P (Aerostar 700P)

Description of the Type Design Change: Installation of a sunvisor system, in accordance with Rosen Product Development, Inc. Drawing List R1330000-DL, Revision A, dated July 21, 1998, or later FAA approved revision.

Limitations and Conditions: The approval of this change in type design applies to the above model only. This approval should not be extended to aircraft of this model on which other previously approved modifications are incorporated unless it is determined that the relationship between this change and any of those other previously approved modifications, including changes in type design, will introduce no adverse effect upon the airworthiness of the aircraft. A copy of this Certificate and Rosen Product Development, Inc. Drawing List Number R1330000-DL, Revision A, dated July 21, 1998, or later FAA approved revisions, shall be maintained as part of the permanent records of the modified aircraft.

If the holder agrees to permit another person to use this certificate to alter the product, the holder shall give the other person written evidence of that permission.

This certificate and the supporting data which is the basis for approval shall remain in effect until surrendered, suspended, revoked, or a termination date is otherwise established by the Administrator of the Federal Aviation Administration.

Date of application: November 2, 1998
Date of issuance: March 15, 1999
Date reissued: March 24, 2003
Date amended:

FEDERAL AVIATION ADMINISTRATION

By direction of the Administrator

(Signature)

for Acting Manager, Seattle Aircraft Certification Office
(Title)

Any alteration of this certificate is punishable by a fine of not exceeding $1,000, or imprisonment not exceeding 3 years, or both.

This certificate may be transferred in accordance with FAR 21.47.

FAA FORM 8110-2(10-68)

Piper Aerostar
Monorail Sunvisor System

Date	Revision	Aprv
2/17/22	J	SYS

Drawing List
R1330000-DL

Doc. #9040-0133-001

Drawing	Replaces	Description	Rev.
1330000	R1330000	Complete Assembly	C
1330100	R1330100	Monorail Assembly	E
1330101	R1330101	Monorail	D
1330102		Front Mounting Bracket	B
1330103		Rear Mounting Bracket	B
1410105	R1410105	Stand Off	E
1350400	R1330400	Lens Assembly	N
1350401	R1350401	Lens	K
1110202		Swivel Nut Plate	E
1120000-001	R1120000-001	Complete Clamping Block Assembly	K
1120101-001	R1120101-001	Nut Plate – Standard	L
1120102-001	R1120102-001	Clamping Block Body	L
1120104		Thumb Knob – Standard	M
1120203	R1120203	Swivel	P
	KITS		
RCBS-300-11M		**Thumb Knob Kit**	D
1120104	RCBS-300-11M	Thumb Knob - Standard	M
1130016	PCS-1000-14STZO	E-Clip	C
RCBS-300-18		Spring	
RCBS-100		**Clamping Block Assembly**	E
1120000-001		Complete Assembly	K
1110202 832X716FSHCSSBP 832X1/4BSHCSSBP		Plate, Swivel Nut 8-32 x 7/16 FSHC B/P Screw 8-32 x ¼ BSHC B/P Screw	E
R1350401		**Lens Kit**	K
9041-0133-001		Installation Instructions for Piper Aerostar 600, 601, 601P, 602, 602P, and 700	C

Installation Instructions for Piper Aerostar 600, 601, 601P, 602, 602P, and 700 (Kit RPAS-300-2)

This is an FAA STC'd installation requiring a log book entry upon completion.

Doc: 9041-0133-001

Rev	Date	Approved
C	2/17/10	GH

Please read through these instructions completely before beginning.

Hardware:

4	MS24693-C51B	#8-32 X 5/8 Stainless Steel Flat Head Phillips Screw
2	AN526C832R10	#8-32 x 5/8 Screw
1	A8K75	#8 Rivnut
1	3/32 Hex Key	
1	7/64 Hex Key	

- Remove existing Visors.
- Remove screw from center of windscreen trim and the screws form each side of the windscreen trim.

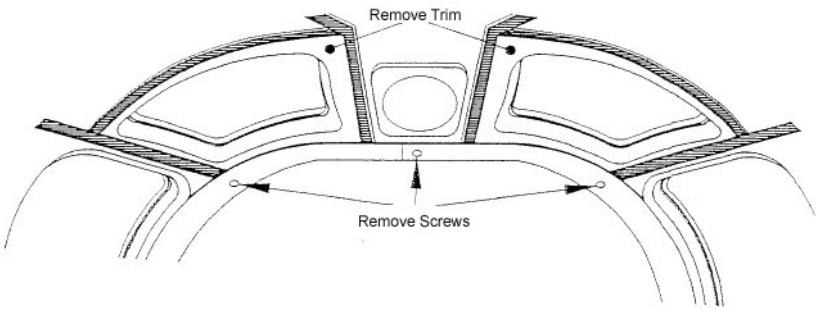

- Move windscreen trim so you can remove the overhead windscreen trim. Be very careful not to crack or break the trim.
- Remove both overhead window trim pieces. Be very careful not to crack or break them.
- Temporarily re-install the windscreen trim using the center screw.
- Temporarily attach the front brackets of the visor monorail with 4 counter-sunk screws where the old visors were mounted. You may have to apply a little pressure in the area of the rail to attach. This is normal. Do not tighten. Slide visor monorail to center the counter-sunk screws in the bracket slots. Position side of monorail brackets on the edges of the metal frame as shown.

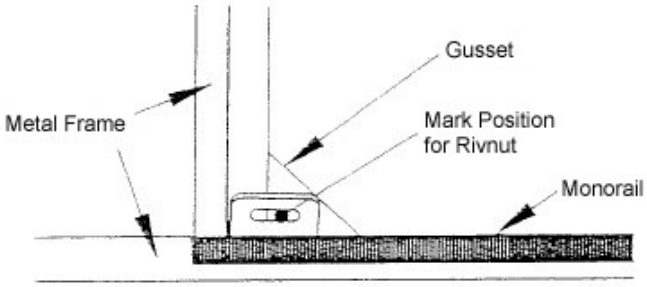

- Mark the position of hole for rivnut in the bracket slot on the gusset for both pilot and co-pilot side.

- Remove the monorail.

- Using a 7/32” drill with a 1/8” depth stop, or a piece of scrap steel behind the gusset to prevent drilling into the aircraft skin, drill through the gusset at the marked location on both sides. ***Be careful not to drill into the aircraft skin.***

- Install the rivnuts.

- Mark the position of the rivnuts on the metal frame with a pencil so you can accurately drill the trim pieces on re-installation.

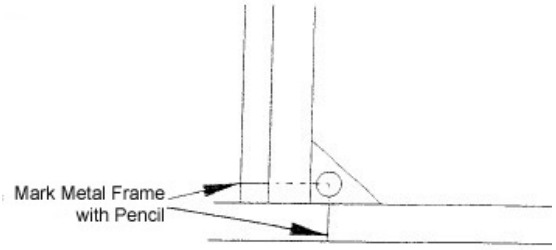

- Re-install the overhead window trim. Make sure they are correctly and firmly seated in the metal frame.

- Use a 1/8” drill with a 1/8” drill stop to drill through the overhead window trim pieces at the locations indicated by the marks on the metal frames. ***Be Careful not to drill into the rivnuts.***

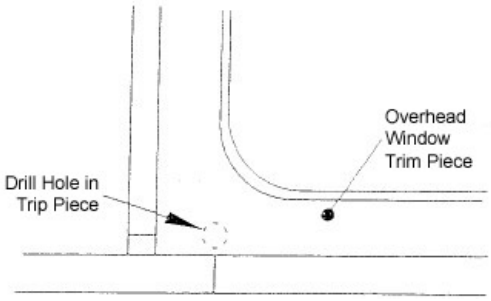

- Attach the front brackets of the monorail with 4 counter-sunk screws where the old visors sere mounted. You may have to apply a little pressure in the center of the rail to attach. This is normal. Do not tighten yet. Position monorail to center the counter-sunk screws in the bracket slots.

- Attach side brackets with 2 flat head screws.

- Make sure everything is properly aligned and tighten all 6 screws.

- Install both visor assemblies by unscrewing the thumb tension knobs until the clamping blocks can be slipped over the rails. Tighten the thumb tension knobs until the snap ring can be installed onto the snap ring groove on the back. Install the provided snap ring. This snap ring prevents inadvertent over loosening of the tensioning knob and acts as a tactile indicator that further loosening must not be attempted.

- When the visor is on the rail the tensioning knob should face the pilots.

- To move the visors loosen the thumb tensioning knob until the clamp is loose enough to be slid along the monorail while holding the thumb knob. To move past the mounting brackets the visor must be positioned so the clamps pass over the brackets.

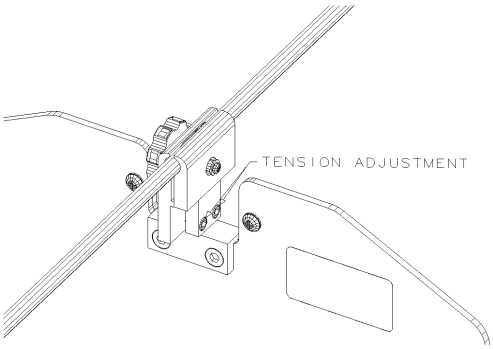

- Your monorail system is equipped with a swivel design that allows rotation about the axis of the lens. Rotational tension can be adjusted by adjusting one or both of the hex socket head cap screws on the back side of the clamp block and below the thumb knob screw.

- The visor should be aligned with the clamp block before sliding along the monorail.

- As this is a one piece monorail system either visor can move the entire length of the system allowing complete sun shielding not previously available.

Continued Airworthiness Instructions:

- (**On the ground only)**
    - Periodically clean the lenses with a soft cloth and Rosen Plastic Cleaner, Polisher and Protectant, or mild soap and water. Do not use abrasives on the lens.
    - Periodically adjust the pivot tensions on the visor assemblies.
- Updates to this Continued Airworthiness section are available on the Rosen Website. (www.rosenvisor.com)

The most up to date version of this document is available on the Rosen Website. (www.rosenvisor.com) We recommend that you periodically look to make sure you are using the most current version.

Airworthiness Limitations:

The Airworthiness Limitations Section is FAA approved and specifies maintenance required under §§43.16 and 91.403 of the Federal Aviation Regulations unless an alternative program has been FAA approved.

There are no airworthiness limitations associated with this installation.